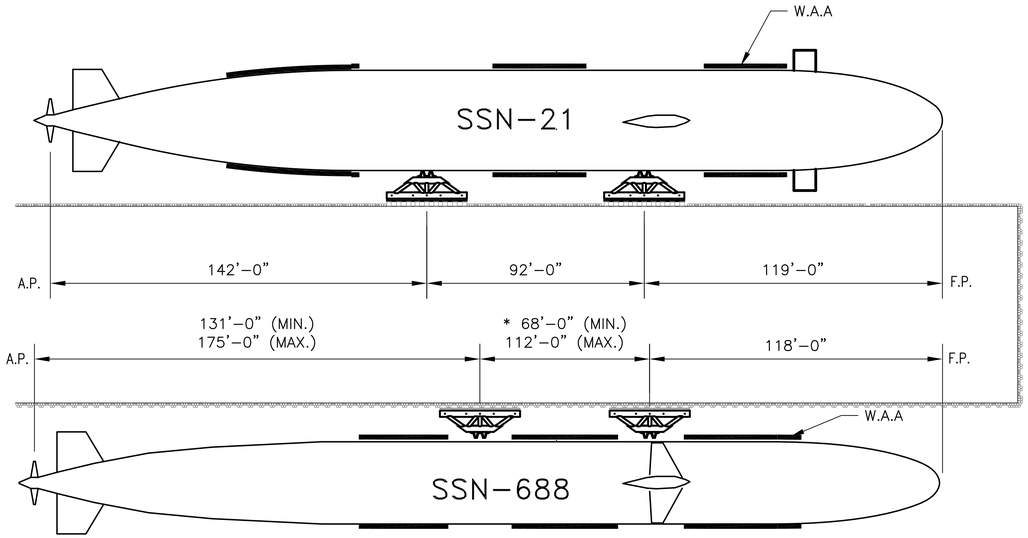


* NOTE: 68'–0"(MIN.) DISTANCE APPLIES ONLY FOR SSN–688 ATTACK CLASS SUBMARINES OUTFITTED WITH W.A.A.

FOR ALL SUBMARINES OUTFITTED WITH W.A.A., CAMEL MUST BE LOCATED AT MIDPOINT OF OPENING BETWEEN W.A.A'S

1. MINIMUM STANDOFF SEPARATION FROM PILE CLUSTER TO COMPRESSED FENDER (@ 50 % DEFLECTION) PROVIDED BY CAMEL AND ARCH FENDERS = 11'–3".
2. SSN 688 REQUIRED CLEARANCE BETWEEN HULL AND PILE CLUSTER:
   6'–9" @ TOWED ARRAY, 8'–0" @ FORWARD DIVING PLANE
3. SSN 21 REQUIRED CLEARANCE BETWEEN HULL AND PILE CLUSTER:
   6'–0" @ HORIZONTAL STABILIZER, 8'–11" @FORWARD DIVING PLANE
4. PLAN VIEW CLEARANCE BETWEEN W.A.A AND TIP OF ARCH FENDER:
   SSN 688 = 10'–6", SSN 21 = 21'–3"

# CAMEL GENERAL ARRANGEMENT FOR ATTACK SUBMARINES

1/32"= 1'–0"

## GN PARAMETERS

| SHIP ENVIRONMENTAL DATA | SSN–21 | SSN–688 |
|---|---|---|
| DISPLACEMENT | 9100 LONG–TONS | 6930 LONG–TONS |
| LENGTH | 353 FT | 361 FT |
| BEAM | 40 FT | 33 FT |
| HULL ALLOWABLE CONTACT PRESSURE (ASSUMES A 50% INCREASE IN ALLOWABLE) | 50 PSI | 50 PSI |
| WIND VELOCITY | 75 MPH | 75 MPH |
| CURRENT VELOCITY | 2.0 KNOT (MAX) | 2.0 KNOT (MAX) |
| | 0.5 KNOT (MIN) | 0.5 KNOT (MIN) |
| APPROACH VELOCITY | 0.5 FPS | 0.5 FPS |

RESULTING FORCES FROM IMPACT & MOORING
DYNAMIC CONDITION:
IMPACT OF BERTHING (APPROACH VELOCITY 0.5FPS)

STATIC CONDITION:
CURRENT

FENDER PILE REQUIREMENTS – USING ACTIVITY SHALL CONSULT LOCAL ENGINEERING FIELD DIVISION FOR REQUIRED FENDER PILE REQUIREMENTS.

## BASIS OF DESIGN

THE CAMELS ARE DESIGNED FOR EXTREME CONDITIONS SUCH AS THE IMPACT FROM BERTHING AT HIGH VELOCITY, AND SUBMARINE MOORING FORCES FROM HIGH VELOCITY CURRENTS AND WINDS. FOR THESE CONDITIONS, THE CAMELS MUST BE PLACED TO BE IN CONTACT WITH THE PRESSURE HULL (W.A.A. CONTACT SHALL BE AVOIDED). USING ACTIVITY SHALL CONSULT LOCAL ENGINEERING FIELD DIVISION FOR REQUIRED FENDER PILE REQUIREMENTS.

## GENERAL NOTES:

1. GENERAL MATERIAL REQUIREMENTS:

| | |
|---|---|
| STRUCTURAL STEEL | ASTM A36 (Fy= 36 KSI, 58 KSI) |
| STEEL PIPE (D <= 20" DIAMETER) | ASTM A501 (Fy=36 KSI, Fu=58 KSI) |
| STEEL PIPE (D > 20" DIAMETER) | API SPECIFICATION 5L, PSL 1, GRADE X42 (Fy=42 KSI, Fu=60 KSI) |
| BOLTS | ASTM 325 (RUBBER FENDERS), ASTM 307 (POLYETHYLENE WEAR STRIPS) |
| ELECTRODES | E70XX |
| GRATING | 1 1/2" (1 1/2"x1 1/2") |
| | FIBERGLASS REINFORCED POLYESTER (FRP) |

DESIGN LIVE LOAD:.....90 PSF
THICKNESS:.....1 1/2"
SPACING BETWEEN BARS:.....1 1/2"
BAR THICKNESS:
BEARING BARS:.....1/4"
CROSS BARS:.....1/4"

RUBBER FENDERS:

SIZES, SHAPES, AND THICKNESS', SHALL BE AS SHOWN. THE TOLERANCES AND QUALITY ASSURANCE PROVISION FOR THE FENDERS SHALL BE IN ACCORDANCE WITH ASTM D 2000.

RUBBER FENDERS SHALL HAVE A MINIMUM ENERGY CAPACITY OF 10,000 LB–FT/FT, AND IN ADDITION, THE MAXIMUM FORCE DEVELOPED AT THIS ENERGY LEVEL SHALL NOT EXCEED 15,000 LB. PER LINEAR FOOT OF FENDER. THE PRECEDING PERFORMANCE CHARACTERISTICS SHALL BE MEASURED AT A DEFLECTION OF THE FENDER UNIT NOT TO EXCEED 50% OF THE FENDER DEPTH.

2. ALL BOLTS, NUTS, AND WASHERS ARE TO BE 3/4" DIAMETER HOT DIPPED GALVANIZED UNLESS NOTED OTHERWISE.

3. WELDING SHALL BE DONE TO THE REQUIREMENTS OF THE AMERICAN WELDING SOCIETY CODE D1.1.

4. AFTER ALL WELDING HAS BEEN COMPLETED, AND EXCEPT AS SPECIFIED, PAINT ALL EXTERIOR STEEL SURFACES IN ACCORDANCE WITH NAVFAC STANDARD SPECIFICATION C49. SEE SPECIFICATIONS FOR REQUIREMENTS.

5. CALCULATED WEIGHT OF ONE (1) CAMEL IS BETWEEN 38,000 AND 41,000 POUNDS AND IS (W/O FOAM) DEPENDENT ON THE FENDER MANUFACTURERS WEIGHT OF FENDERS. TWO CAMELS ARE REQUIRED FOR ONE SHIP SET. RESERVE BUOYANCY IS BETWEEN 8300 AND 6800 POUNDS DEPENDING ON THE WEIGHT OF THE FENDERS.

6. THE CAMELS MAY BE LAUNCHED WITHOUT BALLAST. THE LIST AND TRIM OF THE CAMEL CAN BE CORRECTED BY PLACING FRESH WATER OR DRY SAND IN THE 10" VERTICAL BALLAST TUBES THRU 4" DIAMETER PIPE PLUG OPENINGS LOCATED IN THE TOP 36' DIAMETER FLOATATION PIPES. 4" DIAMETER PIPE PLUGS ARE PROVIDED AT THE BOTTOM OF THE 10" DIAMETER PIPES FOR THE REMOVAL OF SAND OR FRESH WATER BALLAST.

(A) THE COMPUTED AMOUNT OF SAND OR FRESH WATER IS 1600 LB. 17.9 CUBIC FEET OF SAND OR 192 GALLONS OF WATER.)

(B) FLOATATION TESTING – AFTER FINAL ASSEMBLY IS COMPLETE, THE CONTRACTOR SHALL FLOAT THE CAMEL TO ASCERTAIN THAT THE CAMEL FLOATS AT A LEVEL DRAFT. BALLAST IN ADDITION TO THAT DESCRIBED ABOVE, SHALL BE ADDED BY THE CONTRACTOR AS REQUIRED TO FLOAT THE CAMEL WITHIN THE FOLLOWING TOLERANCES:

| | |
|---|---|
| TRIM ANGLE (FORWARD & AFT) | 0.25 DEGREE (1.5" DRAFT VARIATION) |
| LIST ANGLE (PIER SIDE TO SUB SIDE) | 1.0 DEGREE (1.25" DRAFT VARIATION) |

| SYM. | DESCRIPTION | DATE | APPR |
|---|---|---|---|

SEAL

SATISFACTORY TO:
SEE NAVFAC DWG NO. 1404667
D.O. NEUMAN
FOR COMMANDER, NAVSEASYSCOM
1/17/91
DATE
APPROVED
FOR COMMANDER, NAVFACENGCOM
DATE

| A/E | | EFD |
|---|---|---|
| | DESIGN | VRD |
| | DRAWN | BJD |
| | REVIEW | VRD |
| | QC | |
| | CHIEF ARCH./ ENGR. | |
| | PROJECT MANAGER | VRD |
| | FIRE PROTECTION | |
| | BRANCH MANAGER | |
| | DESIGN DIRECTOR | |

DEPARTMENT OF THE NAVY
NAVAL FACILITIES ENGINEERING COMMAND
WASHINGTON, D.C.
NORFOLK, VIRGINIA
STANDARD DRAWING
ATTACK SUBMARINE CAMEL
GENERAL ARRANGEMENT

CODE ID. NO. 80091 | SIZE D
SCALE: AS NOTED
EFD NO.
CATEGORY CODE: 159–00
SPEC. NO. NFSS – C49
CONSTR. CONTR. NO.
NAVFAC DRAWING NO.
10400031
SHEET 1 OF 5
S–001
DRAWFORM REVISION MAY 2000

FILENAME: CAMEL2.DWG, UPDATED ON 11/27/02 AT 10:45, XREFS: NONE