UFC 3-575-01
July 1, 2012

UNIFIED FACILITIES CRITERIA (UFC)

LIGHTNING AND STATIC ELECTRICITY PROTECTION SYSTEMS

APPROVED FOR PUBLIC RELEASE: DISTRIBUTION UNLIMITED

LIGHTNING AND STATIC ELECTRICITY PROTECTION SYSTEMS

Any copyrighted material included in this UFC is identified at the point of use. Use of the copyrighted material apart from this UFC must have the permission of the copyright holder.

NAVAL FACILITIES ENGINEERING COMMAND (Preparing Activity)

U.S. ARMY CORPS OF ENGINEERS

AIR FORCE CIVIL ENGINEER SUPPORT AGENCY

Record of Changes (changes are indicated by **1**\…/**1**/)

Change No.	**Date:**	**Location**

This UFC supersedes MIL-HDBK 1004/6, *Lightning Protection*, and Army TM 5-811-3/ Air Force AFM 88-9 Chapter 3, *Electrical Design, Lightning and Static Electricity Protection*.

FOREWORD

The Unified Facilities Criteria (UFC) system is prescribed by MIL-STD 3007 and provides planning, design, construction, sustainment, restoration, and modernization criteria, and applies to the Military Departments, the Defense Agencies, and the DoD Field Activities in accordance with USD (AT&L) Memorandum dated 29 May 2002. UFC will be used for all DoD projects and work for other customers where appropriate. All construction outside of the United States is also governed by Status of Forces Agreements (SOFA), Host Nation Funded Construction Agreements (HNFA), and in some instances, Bilateral Infrastructure Agreements (BIA.) Therefore, the acquisition team must ensure compliance with the most stringent of the UFC, the SOFA, the HNFA, and the BIA, as applicable.

UFC are living documents and will be periodically reviewed, updated, and made available to users as part of the Services' responsibility for providing technical criteria for military construction. Headquarters, U.S. Army Corps of Engineers (HQUSACE), Naval Facilities Engineering Command (NAVFAC), and Air Force Center for Engineering and the Environment (AFCEE) are responsible for administration of the UFC system. Defense agencies should contact the preparing service for document interpretation and improvements. Technical content of UFC is the responsibility of the cognizant DoD working group. Recommended changes with supporting rationale should be sent to the respective service proponent office by the following electronic form: Criteria Change Request. The form is also accessible from the Internet sites listed below.

UFC are effective upon issuance and are distributed only in electronic media from the following source:

- Whole Building Design Guide web site http://dod.wbdg.org/.

Hard copies of UFC printed from electronic media should be checked against the current electronic version prior to use to ensure that they are current.

JAMES C. DALTON, P.E. Chief, Engineering and Construction U.S. Army Corps of Engineers	JOSEPH E. GOTT, P.E. Chief Engineer Naval Facilities Engineering Command
TERRY G. EDWARDS, P.E. Director, Air Force Center for Engineering and the Environment Department of the Air Force	MICHAEL McANDREW Director, Facility Investment and Management Office of the Deputy Under Secretary of Defense (Installations and Environment)

UNIFIED FACILITIES CRITERIA (UFC)
NEW DOCUMENT SUMMARY SHEET

Document: UFC 3-575-01, *Lightning and Static Electricity Protection Systems*

Superseding:

- MIL-HDBK 1004/6, *Lightning Protection*.
- Army TM 5-811-3 and Air Force AFM 88-9 Chapter 3, *Electrical Design, Lightning and Static Electricity Protection*.

Description: UFC 3-575-01 provides policy and guidance for design criteria and standards regarding static electricity protection, lightning protection systems and related grounding for facilities and other structures.

Reasons for Document:

- Provide technical requirements.
- Incorporate new and revised industry standards.
- Standardize the tri-service criteria using NFPA 780. Applicable portions of UL 96A are incorporated but UL 96A is no longer relied upon as a basis for compliance.

Impact: There are negligible cost impacts associated with this UFC. However, the following benefits should be realized.

- Standardized guidance has been prepared to assist electrical engineers in the development of the plans, specifications, calculations, and Design/Build Request for Proposals (RFP).
- This UFC coordinates with all electrical-related UFCs and provides consistent guidance with the other electrical-related UFCs.

Unification Issues:

- The Air Force uses a Shepherd's Crook design for static ground protection, which is shown in Figure 2-2. Although not considered a unification issue, it is listed as an Air Force only criterion since the Army no longer uses this style and the Navy never did use this style.
- The Air Force requires third party certification by organizations other than UL for Lightning Protection System Certificates. The Army and Navy are still evaluating if this approach can be permitted for their facilities.

TABLE OF CONTENTS

CHAPTER 1 INTRODUCTION 1
1-1 PURPOSE. 1
1-2 APPLICABILITY. 1
1-3 GENERAL BUILDING REQUIREMENTS. 1
1-4 REFERENCES. 1
1-5 KEY CODES AND STANDARDS. 2
CHAPTER 2 STATIC ELECTRICITY PROTECTION 3
2-1 STATIC GROUNDING AND BONDING REQUIREMENTS. 3
2-1.1 Bonding and Grounding Conductors. 3
2-1.2 Connections. 3
2-1.3 Static Bus Bars. 4
2-1.4 Resistance to Ground. 5
2-1.5 Ground Grab Bars. 5
2-2 GENERAL APPLICATIONS. 5
2-2.1 Conditions. 5
2-2.2 Applications. 5
2-3 SPECIFIC APPLICATIONS. 6
2-3.1 Petroleum Oil Lubricants (POL) Facilities. 6
2-3.2 Hospitals. 6
2-3.3 Aircraft Parking Aprons and Hangar Floors. 6
2-3.3.1 Aircraft Parking Aprons. 7
2-3.3.1.1 Static Grounds. 7
2-3.3.1.2 Power Grounds. 8
2-3.3.1.3 Aircraft Fueling. 8
2-3.3.2 Aircraft Hangar Floors. 8
2-3.3.3 Grounding Receptacle 9
2-3.4 Aircraft Sunshades and Shelters. 11
CHAPTER 3 LIGHTNING PROTECTION SYSTEMS 12
3-1 DETERMINING THE REQUIREMENTS FOR LIGHTNING PROTECTION 12
3-2 CONVENTIONAL LIGHTNING PROTECTION SYSTEMS. 13
3-2.1 Air Terminals. 13
3-2.2 Masts. 13
3-2.3 Joint Design. 14

3-2.4 Down Conductors. 14
3-3 GROUNDING AND BONDING FOR LPS....14
3-4 SURGE PROTECTION....15
3-5 REQUIREMENTS FOR ORDINARY FACILITIES AND STRUCTURES....15
3-5.1 Non-Reinforced Concrete or Wood Frame Building. 15
3-5.2 Reinforced Concrete Buildings. 15
3-5.3 Steel Frame Building. 15
3-5.3.1 Steel Framed Building with Metal Siding....16
3-5.3.2 Nonmetallic Exterior Walls with Metallic Roof. 16
3-5.4 Metal Roof with Metal Walls....16
3-5.5 Ramps and Covered Passageways. 16
3-5.6 Post Tension Systems. 17
3-5.7 Buildings Containing Hazardous Areas....17
3-5.8 Aircraft Control Navigation Aids. 17
3-5.9 Weapons Systems Electronic Facilities, Above Grade....17
3-5.10 Weapons Systems Electronic Facilities, Below Grade. 18
3-5.10.1 Protection Included with Other Protection Systems. 18
3-5.10.2 Requirements Not Included in Other Protection Systems. 18
3-5.10.3 Installation of Ground Ring. 18
3-5.11 Electrically-Controlled Target Training System. 19
3-5.11.1 Control Tower. 19
3-5.11.2 Target Control System....19
3-5.12 Petroleum Oil Lubricants (POL) Storage Tanks. 20
3-5.13 Satellite Dishes....20
APPENDIX A REFERENCES 21
APPENDIX B GLOSSARY 23

FIGURES

Figure 2-1 Static Bus Bar. 4
Figure 2-2 Air Force Static Grounding Point.... 8
Figure 2-3 Grounding Receptacle. 10
Figure 3-1 Typical Air Terminal Assembly Using Steel Framing As Conductor.... 16
Figure 3-2 Below-Grade Weapons Systems Electronics Facilities – Ground Ring, Cross Section Elevation. 19

TABLES

Table 3.1 Fuel Storage Tank Grounding Schedule. 20

CHAPTER 1 INTRODUCTION

1-1 PURPOSE.

This UFC provides policy and design requirements for static electricity protection, and lightning protection systems and related grounding for facilities and other structures.

The information provided here must be utilized by electrical engineers in the development of the plans, specifications, calculations, and Design/Build Request for Proposals (RFP) and must serve as the minimum electrical design requirements. It is applicable to the traditional electrical services customary for Design-Bid-Build construction contracts and for Design-Build construction contracts. Project conditions may dictate the need for a design that exceeds these minimum requirements.

UFC 3-501-01, *Electrical Engineering*, provides the governing criteria for electrical systems, explains the delineation between the different electrical-related UFCs, and refers to UFC 3-575-01 for static electricity protection and lightning protection system requirements. Refer to UFC 3-501-01 for design analysis, calculation, and drawing requirements.

1-2 APPLICABILITY.

Compliance with this UFC is mandatory for DoD facilities located on or outside of DoD installations, whether acquired by appropriated or non-appropriated funds, or third party finance and constructed. Facilities include all temporary or permanent structures, including waterfront facilities, outside storage, and shore protection for ships and aircraft.

Criteria in this UFC document apply to DoD leased facilities outside of DoD installations, whether by appropriated or non-appropriated funds, or third party financed and constructed when DoD or DoD contractor maintains the facility.

1-3 GENERAL BUILDING REQUIREMENTS.

UFC 1-200-01, "General Building Requirements", provides applicability of model building codes and government-unique criteria for typical design disciplines and building systems, as well as for accessibility, antiterrorism, security, sustainability, and safety. Use this UFC in addition to UFC 1-200-01 and the UFCs and government criteria referenced therein.

1-4 REFERENCES.

Appendix A contains a list of references used in this UFC. References applicable to a specific topic are also listed and described in the appropriate sections of this UFC.

1-5 KEY CODES AND STANDARDS.

Comply with the following codes and standards:

- IEEE 142, *IEEE Recommended Practice for Grounding of Industrial and Commercial Power Systems.*
- NFPA 70, *National Electrical Code*.
- NFPA 70B, *Recommended Practice for Electrical Equipment Maintenance*.
- NFPA 77, *Recommended Practice on Static Electricity*.
- NFPA 780, *Standard for the Installation of Lightning Protection Systems*.
- UL 96, *Lightning Protection Components.*
- UL 467, *Grounding and Bonding Equipment*.

Ordnance facilities or locations where ordnance and explosives are handled and stored require special protective measures. Comply with the following documents for these systems:

- UFC 4-420-01, *Design: Ammunition and Explosives Storage Magazines*. (DRAFT)
- NAVSEA OP-5, Volume 1, *Ammunition and Explosives Ashore*.
- AFMAN 91-201, *Explosive Safety Standards*.
- AFMAN 91-118, *Safety Design and Evaluation Criteria for Nuclear Weapon Systems*.
- Department of the Army Pamphlet 385-64, *Ammunition and Explosives Safety Standards*.

Additional requirements associated with grounding, bonding, and shielding of communications facilities are provided in MIL-HDBK 419A, *Grounding, Bonding and Shielding for Electronic Equipment and Facilities*.

CHAPTER 2 STATIC ELECTRICITY PROTECTION

2-1 STATIC GROUNDING AND BONDING REQUIREMENTS.

Identify hazardous classified locations in accordance with NFPA 70. Provide grounding and bonding for these areas in accordance with NFPA 77 to support the intended operations.

Include a listing of hazardous materials, containers, and operating units in the design, and indicate fixed operating equipment locations on the drawings. Identify portable and movable equipment requiring static electricity grounding distinctively by location and with type of grounding method each location requires.

2-1.1 Bonding and Grounding Conductors.

Bonding and grounding conductors must be large enough to withstand mechanical damage and must not be smaller than 6 AWG copper. For added flexibility, use braided cable or flexible bonding strap for static grounds on portable or movable equipment. Install at least two separate braided cables or flexible bonding straps on portable or movable equipment such as doors, hinged shelves, or tables. Conductors are typically uninsulated. Apply bonding for other facilities in accordance with NFPA 70 and NFPA 780. Before securing any bond, ensure electrical continuity by removing any paint, oil, dirt, or rust on contact surfaces. Bonds shall have a resistance reading of one ohm or less.

2-1.2 Connections.

Do not connect static grounds above grade to

- Electrical equipment grounding systems.
- Telecommunications system grounds.
- Gas, steam, oil, hydraulic, hot water or air lines.
- Sprinkler systems.
- Any component of the lightning protection system (LPS).

These systems shall be interconnected below grade. Connection above grade to a down conductor of the LPS is authorized if the down conductor is within the bonding distance calculated in NFPA 780. As an exception to performing the calculations required by NFPA 780, the 6 foot (1.83 m) bonding requirement allowed by UL 96A can be used. The preferred method for reducing the potential for sideflash is to increase the separation distance, so that a bond is not required. The minimum size of the bonding conductor is 6 AWG copper.

Bond other interior grounding system conductors separately to static electricity bonding jumpers or other bonded metals, and connect at or below finished grade to an appropriate grounding electrode or grounding system. Steel framing members of the building and metal siding that are electrically bonded together and not used for lightning protection may be used as part of the grounding conductor system, but no penetrations into exterior steel siding or other exterior finish are allowed above ground level, whether sealed or not.

2-1.3 Static Bus Bars.

A static bus typically consists of 2 inch x ¼ inch (51 mm x 6 mm) copper bars installed on the interior wall of the facility, as shown in Figure 2-1. Static bus bars shall be used only for static grounding. Bus bars, especially those used in the telecommunications industry, come with insulators. Static bus bars shall be isolated from other grounding subsystems as much as possible and must be isolated when used for ordnance grounding and from lightning protection down conductors including steel columns used as the down conductor. The grounding system for the static bus bars is typically connected to the building grounding system below grade at a ground ring or ground rod.

Figure 2-1 Static Bus Bar.

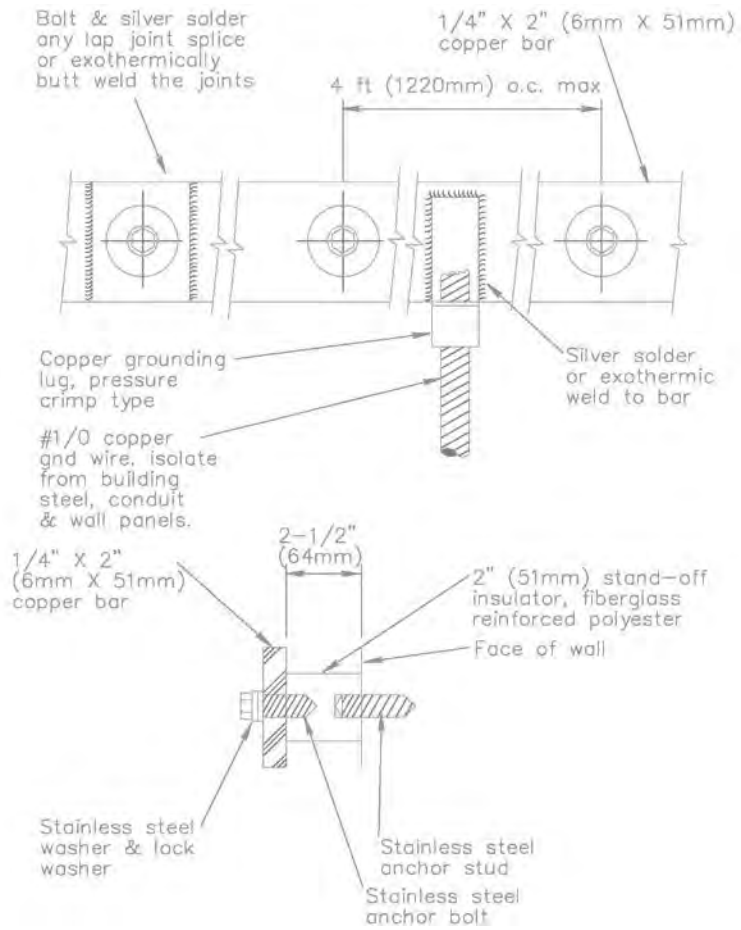

2-1.4 Resistance to Ground.

Current caused by static electricity is typically on the order of milliamperes. A resistance to ground of 10,000 ohms is more than adequate to bleed off normal static charges. All grounds used for static protection in DoD facilities, including those for aircraft and fuel tanks, must have a maximum resistance of 10,000 ohms. Any danger of electrical shock hazard caused by the 10,000 ohm value can be eliminated by proper bonding to other grounding media.

2-1.5 Ground Grab Bars.

Ground grab bars may be installed immediately outside entrance doors to operating buildings, rooms or structures where special hazards exist. A ground grab bar consists of a length of non-corroding conductive pipe or bar which is connected to the earth electrode system (EES).

2-2 GENERAL APPLICATIONS.

2-2.1 Conditions.

This UFC does not identify all applications where static electricity protection should be provided. The electrical designer must analyze suspected potential static electricity charges and address the conductive paths that could reasonably exist between them, particularly in the following conditions:

- Hazardous area classifications and locations as listed in the NFPA 70. The electrical design must incorporate the requirements of the using service relative to hazardous materials, equipment, and containers to enable the construction contractor to proceed with a full understanding of static electricity protection requirements.

- Locations containing hazardous materials that will be handled or stored.

- Movable and portable equipment having static electricity generating capabilities potentially dangerous to personnel.

- Locations containing explosives or related type materials need to comply with applicable Service requirements for ordnance facilities; refer to the paragraph titled “Key Codes and Standards”.

2-2.2 Applications.

Comply with NFPA 77, including the following types of applications:

- Spray painting operations; also apply NFPA 33.

- Conductive flooring.
- Conductive conveyor belts and V-belts.
- Humidification. If humidification is used to control static electricity discharges, daily checks are required to ensure humidity levels are maintained within specified levels.

Static electricity protection for other facilities shall satisfy the requirements within this UFC. Protection for other facilities shall be assessed on a project-by-project basis only. Where criteria of other Federal agencies conflict with criteria contained in this UFC, the more stringent criteria apply.

Ionization techniques are covered in NFPA 77. Ionization techniques are not to be used in hazardous areas. Radioactive ionization sources are not allowed.

2-3 SPECIFIC APPLICATIONS.

2-3.1 Petroleum Oil Lubricants (POL) Facilities.

This paragraph pertains to static electricity protection for pumping, distribution, fueling and defueling storage and miscellaneous handling facilities. Fueling and defueling of fixed wing aircraft on the ground is discussed in the paragraph titled “Aircraft Parking Aprons”. Comply with UFC 3-460-01.

The following items shall be grounded directly to an earth electrode system (EES). Resistance to ground shall not exceed 10,000 ohms.

- Installations that use a static grounding/bonding reel shall ensure the resistance through the reel is 10 ohms or less.
- Aircraft direct fueling stations and hydrant fuel pits. Locate grounds on the aircraft side of any insulating flange used to isolate for cathodic protection systems.

2-3.2 Hospitals.

Comply with NFPA 99 for static electricity protection required for hospitals.

2-3.3 Aircraft Parking Aprons and Hangar Floors.

Do not use static grounds or grounding receptacles for aircraft lightning protection.

2-3.3.1 Aircraft Parking Aprons.

2-3.3.1.1 Static Grounds.

Provide static grounds with less than 10,000 ohms on aprons; in airplane parking-hydrant fueling and defueling areas; and near each hydrant pit.

- For the Army and Navy, mooring eyes / tiedowns, in accordance with UFC 3-260-01, Appendix B, Section 11, are permitted to be used as static grounding points. When the dimensions of the mooring eye rebar are larger than the normal static ground clamp used by the Activity for the aircraft, determine if the Activity will utilize adapters on their clamps, or if they require a separate ground system. If a ground system is required to obtain a power ground (25 ohms), use the grounding receptacle, per Figure 2-3 with a grid arrangement as described in Section 2-3.3.2. Coordinate with Activity on whether or not the receptacle cover and ball chain are required to be removed for Foreign Objects and Debris (fod) prevention.

- For the Air Force, provide static grounds in concrete as illustrated in Figure 2-2 and commonly called a Shepherd's Crook. UFC 3 260-01, Appendix B, Section 11, provides recommendations on different configurations depending on the apron surface material.

Figure 2-2 Air Force Static Grounding Point.

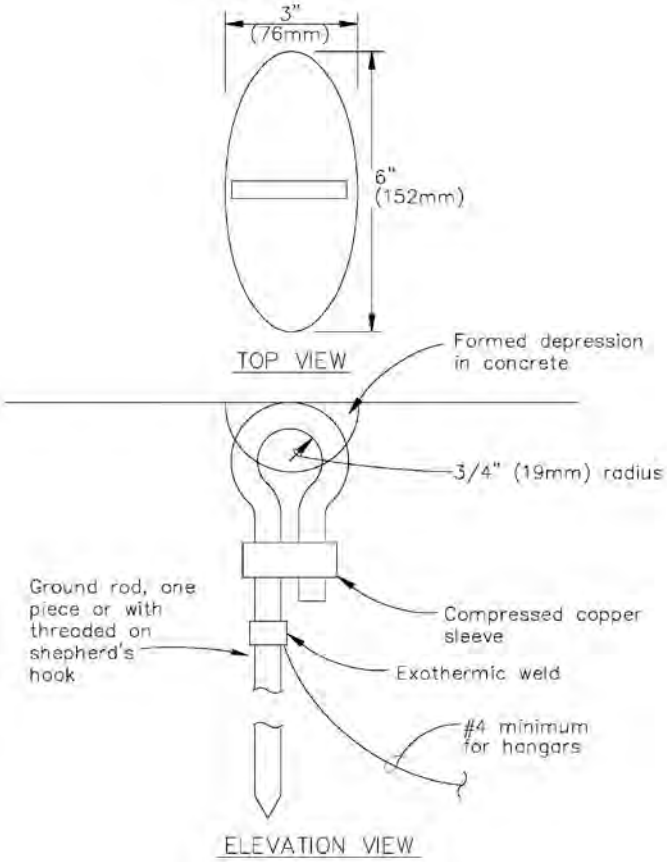

2-3.3.1.2 Power Grounds.

If a power ground system with less than 25 ohms is required on an apron, use the grounding receptacle with grid per Figure 2-3.

2-3.3.1.3 Aircraft Fueling.

In addition to the criteria given herein, apply NFPA 407 when aircraft fueling is involved.

2-3.3.2 Aircraft Hangar Floors.

Grounding devices installed in floors are intended to serve as aircraft static and equipment grounding. A static grounding system conforming to NFPA 77 is suitable for dissipation of any aircraft static electricity to ground. However, because NFPA 70 requires a maximum of 25 ohms resistance to ground for equipment grounding, the 25-ohm requirement governs for this dual-purpose grounding system. Interconnect floor grounding systems electrodes below concrete in a grid arrangement, and interconnect to the hangar electrical service grounding system. Use a minimum of 4 AWG bare copper for interconnections. Where hangar floors are modified, extensions to grounding receptacles shall remain load bearing to match original installation and the cover must

be kept level with the finished floor.

The tie-downs or grounding receptacles shall be interconnected with bare copper cable. UFC 3-260-01, Appendix B, Section 11, provides guidance on layout and configuration of the grounding receptacles, relative to some aircraft. Floor layouts for receptacles must conform to the following:

- In the absence of other guidance, hangars that will be used for a specific number and type of aircraft shall provide one grounding electrode for each aircraft space, approximately 10 ft (3 m) from the centerline of the aircraft space in the vicinity of one of the main landing gears.

- For general purpose hangars, provide electrodes for each aircraft space approximately 10 ft (3 m) from the centerline of the aircraft space, installed at 50 ft (15 m) intervals. Spacing of electrodes from wall lines or columns must not exceed 50 ft (15 m).

- Additional aircraft grounding guidance (operations and maintenance) is provided in MIL-HDBK-274 (AS).

2-3.3.3 Grounding Receptacle

Aircraft hangar floors shall use a grounding receptacle as illustrated in Figure 2-3.

If a separate ground system is required for aircraft parking aprons, use the grounding receptacle with grid as illustrated in Figure 2-3.

Figure 2-3 Grounding Receptacle.

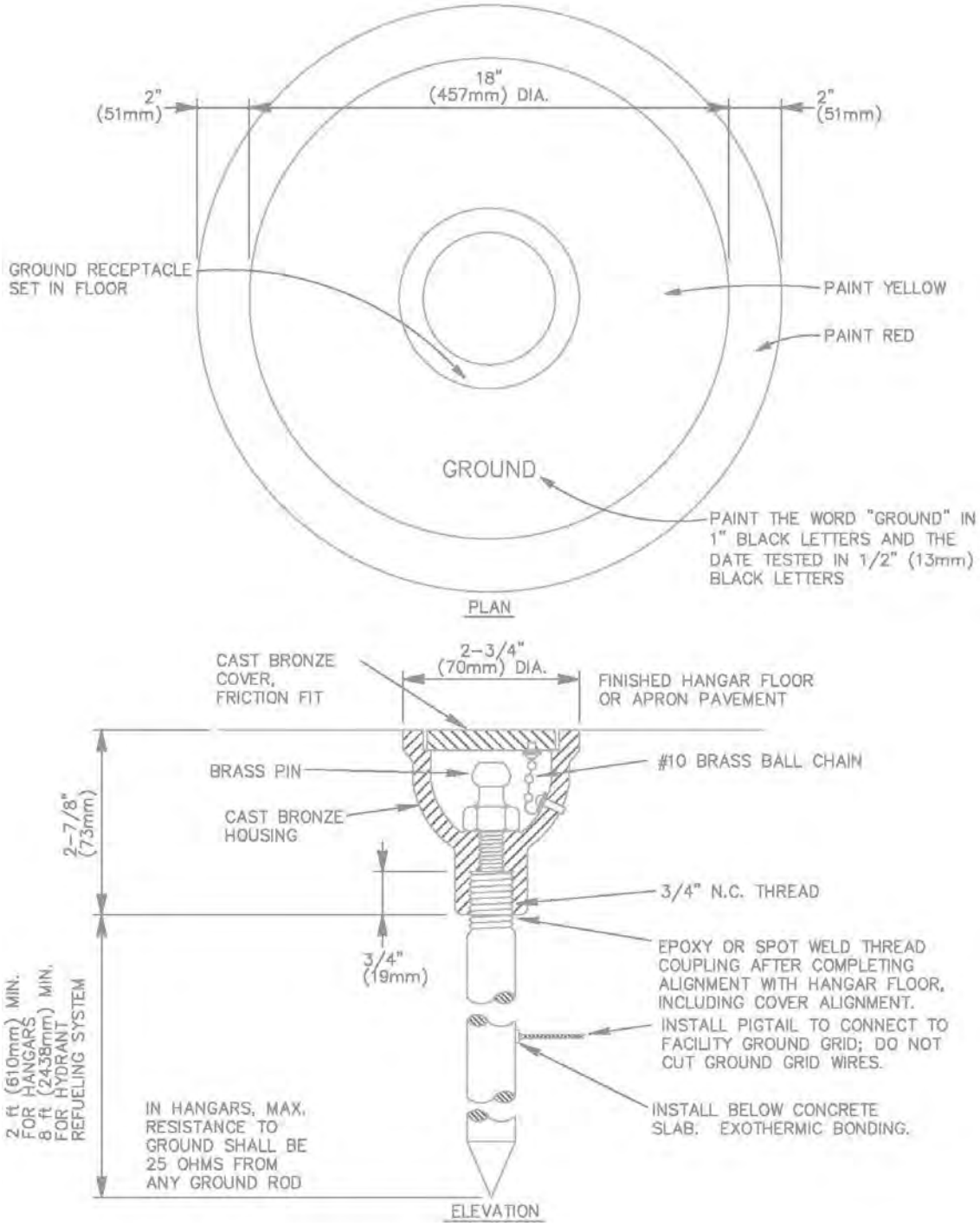

Note 1: Paint colors associated with static grounding services vary with application and service. The paint is applied directly to the hangar floor or apron pavement, and is not applied to the receptacle.

Note 2: When directed by the using activity, receptacle covers with brass ball chain

shown on Figure 2-3 are not required for apron pavement areas.

Note 3: The above criteria will be reconciled with criteria in other UFCs so that the required criteria is located in a single location; the other UFCs and criteria documents will refer to UFC 3-575-01. In the event there is a conflict between this criteria and other criteria in another document, this criteria governs. The following documents are known to be affected by the above criteria:

Document	*Title*
MIL-HDBK-274A(AS)	*Electrical Grounding for Aircraft Safety*
UFC 3-260-01	*Airfield and Heliport Planning and Design*
UFC 4-211-01N	*Aircraft Maintenance Hangars: Type I, Type II and Type III*
UFC 4-211-02NF	*Corrosion Control and Paint Finishing Hangars*
UFC 4-211-02	*Aircraft Corrosion Control and Paint Facilities (99% Draft – September 2011; included here to ensure the UFC is reconciled with this criteria)*

2-3.4 Aircraft Sunshades and Shelters.

Apply NFPA 70 grounding and bonding requirements to aircraft sunshades and shelters. Obtain current guidance from each service. Additional requirements are being developed and will be included in the next change to this UFC. Obtain interim requirements from the AHJ at the associated service. Validate (document in writing and date) confirmation of additional requirements or no additional requirements as of that date.

CHAPTER 3 LIGHTNING PROTECTION SYSTEMS

3-1 DETERMINING THE REQUIREMENTS FOR LIGHTNING PROTECTION.

Provide a risk assessment in accordance with NFPA 780 Annex L and document the required level of protection. Document reduced or enhanced requirements resulting from engineering decisions and good engineering practice.

If lightning protection is required, provide a lightning protection system (LPS) in accordance with NFPA 780 criteria using components manufactured in accordance with UL 96. Provide a UL Lightning Protection Inspection Certificate for the facility certified to NFPA 780, unless the design and inspection are otherwise identified to comply with a different standard for a specific facility.

For Air Force: The contract for a lightning protection system project, or for any project on a facility containing a lighting protection system, shall require an LPS inspection prior to acceptance. The LPS shall be inspected by a commercial, third-party inspector whose sole work is lightning protection, and shall be certified by this third-party inspector as compliant with AFI 32-1065 and NFPA 780, in that priority order. A UL certification on its own shall not be adequate for acceptance of any Air Force project. Projects calling for an LPS addition to an existing LPS project shall consider the configuration of the final LPS in the initial design. Projects of this type shall ensure the final LPS as a whole is compliant with AFI 32-1065 and NFPA 780, in that priority order. The same third-party inspector requirements shall apply.

Evaluate planned facility modifications and additions, and determine if an LPS will be required or if an existing LPS will be affected by the modification/addition. The resulting lightning protection system for the whole facility shall be addressed in the planning and design stages. This may require some adjustment to the existing LPS. If the mission of a facility changes, determine if an LPS is required.

Note: Ensure that systems that are currently compliant with respect to lightning protection are not made noncompliant by facility modifications and additions. LPS shall be considered in the design of any project for a facility that has an LPS. This includes paint projects, roofing projects, projects requiring roof penetrations, installation of new HVAC or other metallic equipment, antenna installation, or other work. Additions and modifications to the facility envelope require re-evaluation of the LPS for the completed facility as a whole. The LPS required by the addition or modification shall not be a simple addition to the LPS. The LPS must be considered a single entity and must comply with requirements of a single LPS upon completion.

Facilities or locations which are used for the development, manufacturing, testing, handling, storage, inspection, holding or maintenance of ammunition or explosives are required to have lightning protection unless specific conditions are met. Comply with the following documents as appropriate for the service and provide a UL Lightning Protection Inspection Certificate for the facility. This certificate shall be certified to

NFPA 780, Chapter 8 and the 100 ft (30.5 m) radius rolling sphere, unless otherwise indicated by that Service; refer to the paragraph titled “Key Codes and Standards”.

3-2 CONVENTIONAL LIGHTNING PROTECTION SYSTEMS.

Note: Nonconventional systems such as dissipation arrays and those using early streamer emission air terminals are prohibited.

3-2.1 Air Terminals.

Air terminals mounted on equipment which is exhausting hazardous vapors shall be a minimum of 60 inches (1524 mm) above the equipment to allow for the vapor to be dispersed. These air terminals require special mechanical supports per NFPA 780. Air terminals installed on “rubber” (EPDM) type roofs shall use adhesive shoes with adhesive approved by the roof manufacturer. In areas of snow and/or constant wind, ensure that a section of roofing material is first glued to the roof and then the air terminal is glued to it unless the roof manufacturer recommends another solution. This section of roofing material shall be a minimum 1 ft^2 (92,900 mm^2).

A nonconductive pole may be used only when heights and structural strength permit and shall be provided with metal air terminals and two bare copper down conductors not less than 1/0 AWG connected to an earth electrode. The down conductors shall be placed as near as possible to 180 degrees apart and shall not be run inside the pole.

Note: The guy wire may be used as one of the down conductors provided it is properly sized and made electrically continuous along its entire length.

3-2.2 Masts.

Masts of heights up to 40 ft (12.2 m) shall be of single section design. When down conductors are required because metal mast thickness is less than 3/16 inches (0.1875 inches or 4.8 mm), the down conductors shall be placed as near as possible to 180 degrees apart. All conductors and connections to the ground loop shall be run on and bonded to the outside of the mast.

Wind and ice loading on the mast and on associated overhead wires shall be considered during design. Provide damping in accordance with manufacturer’s recommendations.

Metal mast foundation designs shall take into account wind loading and ice loading. Foundations for setting metal masts shall be in accordance with the following:

- Steel or aluminum, mounted by anchor bolts set in a concrete foundation poured in place. Follow manufacturer’s recommendations for foundation design and type and for setting of anchor bolts.

- Steel, mounted by means of a stub set directly into a concrete foundation.

Corrosion-resistant steel masts may be set directly into earth where soil conditions permit.

3-2.3 Joint Design.

Slip-joint design shall meet the following requirements:

- Ensure overall structural integrity of the mast.
- Include a field assembly requirement to ensure a snug fit, so that joints of the mast will not loosen when subjected to vibration modes caused by wind or other means after erection.
- Be compatible with field erection requirements to facilitate ease of installation at the site.
- Have good metal-to-metal contact, so that electrical conductivity shall be equal to or better than the parent metal.

3-2.4 Down Conductors.

Do not install down conductors inside down spouts.

3-3 GROUNDING AND BONDING FOR LPS.

Bond equipment or subsystems into a single grounding system for the facility. Apply UFC 3-550-01 for general grounding system requirements. Include the following additional requirements for the LPS:

- When a ground ring is required, install the ground ring in accordance with UFC 3-550-01. This will require the ring to be installed at a minimum depth of 30 inches (762 mm) rather than the minimum 18-inch (457 mm) depth required by NFPA 780.
- Terminate each down conductor to a grounding electrode dedicated to the LPS. This termination can be a ground rod or can be a bond to a ground ring when a ground ring is used. If a ground ring is used, the ground ring is deemed to be associated with the LPS and thereby meets the requirements for a dedicated grounding electrode.
- In accordance with NFPA 780, facilities exceeding 75 feet (23 m) in height shall be protected with Class II materials. Use 2/0 AWG bare copper down conductors and connect to the ground ring when a ground ring is installed.
- When a facility requires an additional dedicated ground ring for a catenary lightning protection system, this ring shall be designated the primary ground

ring. It shall be installed not less than 3 ft (914 mm) beyond the first (inner or secondary) ground ring and the two ground rings shall be bonded together in at least two locations.

- As an exception to performing the side flash calculations required by NFPA 780, the 6 foot (1.83 m) bonding requirement allowed by UL 96A can be used.

- Bond metal ladders to the system at both the upper and lower ends of each ladder.

3-4 SURGE PROTECTION.

Provide appropriate class surge arresters at the distribution transformer supplying the facility.

Provide surge protective devices for all systems identified in NFPA 780. Refer to UFC 3-520-01 for the requirements.

3-5 REQUIREMENTS FOR ORDINARY FACILITIES AND STRUCTURES.

3-5.1 Non-Reinforced Concrete or Wood Frame Building.

The fastener selected shall be appropriate for the application and shall be suitable for attachment to concrete or wood. Aluminum fasteners shall not be mounted to concrete.

3-5.2 Reinforced Concrete Buildings.

Do not use reinforcing steel for down conductors.

3-5.3 Steel Frame Building.

Down conductors may not be required when air terminals are mounted on steel which is at least 3/16 inch (4.763 mm) thick. However, use of steel framework in lieu of down conductors is permitted only if documentation is provided certifying the electrical continuity of the steel framework to less than 1 ohm when measured between the air terminal and the grounding electrode. Bolting, riveting, or welding without this certification is prohibited. Bonding across bolted or riveted construction joints may be one method used to establish or enhance electrical continuity.

Install air terminals in a manner similar to Figure 3-1 when building steel is used as the down conductor.

Figure 3-1 Typical Air Terminal Assembly Using Steel Framing As Conductor.

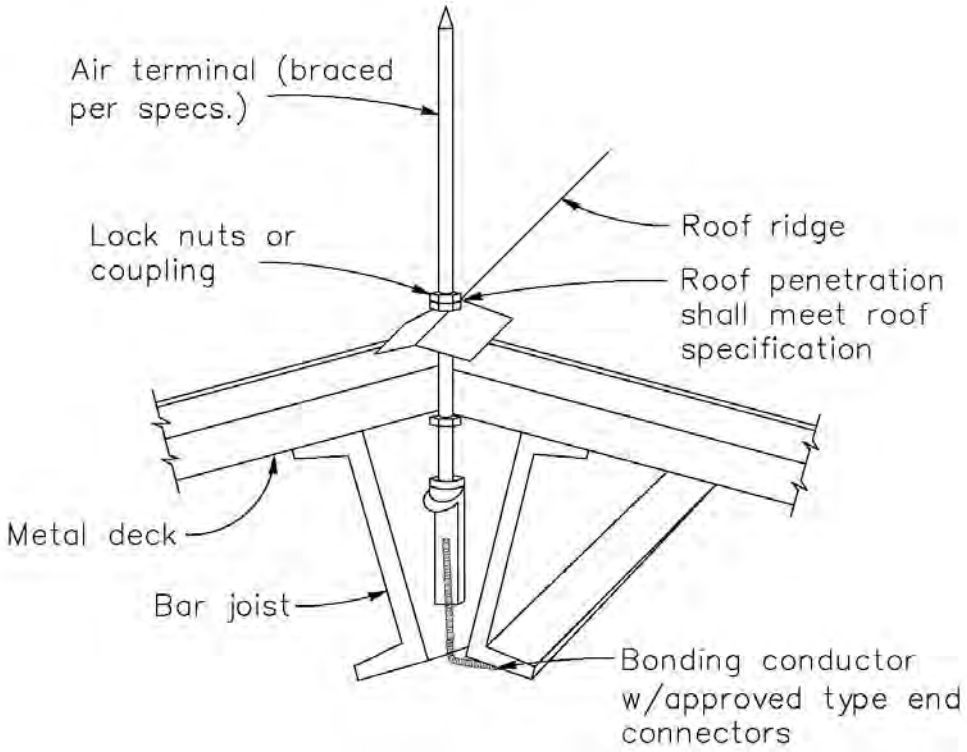

3-5.3.1 Steel Framed Building with Metal Siding.

Bond steel columns of metal clad buildings top and bottom to metal siding.

3-5.3.2 Nonmetallic Exterior Walls with Metallic Roof.

When roof sections are insulated from each other, bond the metal roof sections together so that they are electrically continuous.

3-5.4 Metal Roof with Metal Walls.

Bond metal roof and metal walls so that they are electrically continuous.

3-5.5 Ramps and Covered Passageways.

Verify that ramps and covered passageways do not extend beyond the zone of protection of a facility. If ramps and covered passageways do extend beyond the zone of protection or if an existing structure is affected, refer to the paragraph titled “Determining the Requirements for Lightning Protection” to ensure that the facility certification is maintained.

3-5.6 Post Tension Systems.

On construction utilizing post tension systems to secure precast concrete sections, the post tension rods shall not be used as a path for lightning to ground. Provide down conductors on structures using post tension systems; down conductors shall have sufficient separation from post tension rods to prevent side-flashing. Bond post tension rods to the lightning protection and grounding systems only at the base of the structure; perform this bonding in accordance with the recommendations of the post tension rod manufacturer.

3-5.7 Buildings Containing Hazardous Areas.

Bond metallic objects that are within the hazardous areas and within 10 ft (3 m) of a LPS to the nearest LPS down conductor. Bond metal frames of doors and windows within hazardous areas to the LPS. Bond doors to metal frames using flexible braid-type copper conductors. Where tested resistance is less than 1 ohm between doors and door frames, and a test plan is maintained identifying that location, a flexible braid-type copper conductor connection is not required.

3-5.8 Aircraft Control Navigation Aids.

Protect one-floor frame buildings housing equipment for Instrument Landing System (ILS) and Tactical Air Navigation (TACAN) facilities and other similar type structures with no fewer than two air terminals on each facility.

3-5.9 Weapons Systems Electronic Facilities, Above Grade.

This section pertains to designs for the protection of radars, antennae, electronic equipment vans, launchers, missile controls, and guided missile batteries when permanently installed. Perform the following in the absence of any specific guidance from the agency in charge of the installation:

- The protection patterns must comply with NFPA 780 and consist of mast or mast with catenary style LPS, unless specific guidance is provided for that weapons system platform.

- Locate and arrange protection equipment so as not to obstruct or interfere with the operation of any radar electronic acquisition or tracking beam.

- Where vans are clustered, ground rods for the vans must be interconnected in compliance with MIL-HDBK 419A.

Protect separate buildings containing support equipment for weapons systems electronic facilities in accordance with the building construction type.

3-5.10 Weapons Systems Electronic Facilities, Below Grade.

3-5.10.1 Protection Included with Other Protection Systems.

When an external grounding system design is included for electromagnetic pulse (EMP) protection, electromagnetic interference (EMI) shielding or other protection system, additional lightning protection is not required. Lightning protection is provided by the EMP/EMI system.

3-5.10.2 Requirements Not Included in Other Protection Systems.

When external grounding system design does not include EMP, EMI shielding, or other protection, provide a ground ring including connections to underground metallic objects, such as the following:

- Electrical conduit.
- Mechanical piping.
- Metal tanks.
- Manhole grounds.
- Missile cells or equivalent.
- Internal grounding system of control buildings and power plants.
- Metal ducts for fans.
- Tunnels.

The ground ring is not required if validated by mission operations and documented in the design analysis.

3-5.10.3 Installation of Ground Ring.

Install the ground ring above each buried weapons system building, at least 24 inches (610 mm) below finished grade, and extend beyond the building perimeter not less than 3 ft (914 mm) nor more than 10 ft (3 m). Connect the ground ring to ground rods located as in Figure 3-2, and driven to a point at least 6 inches (152 mm) below normal ground water table level, where earth is available for driving. Metal equipment extending above ground shall be grounded to the ground ring.

Figure 3-2 Below-Grade Weapons Systems Electronics Facilities – Ground Ring, Cross Section Elevation.

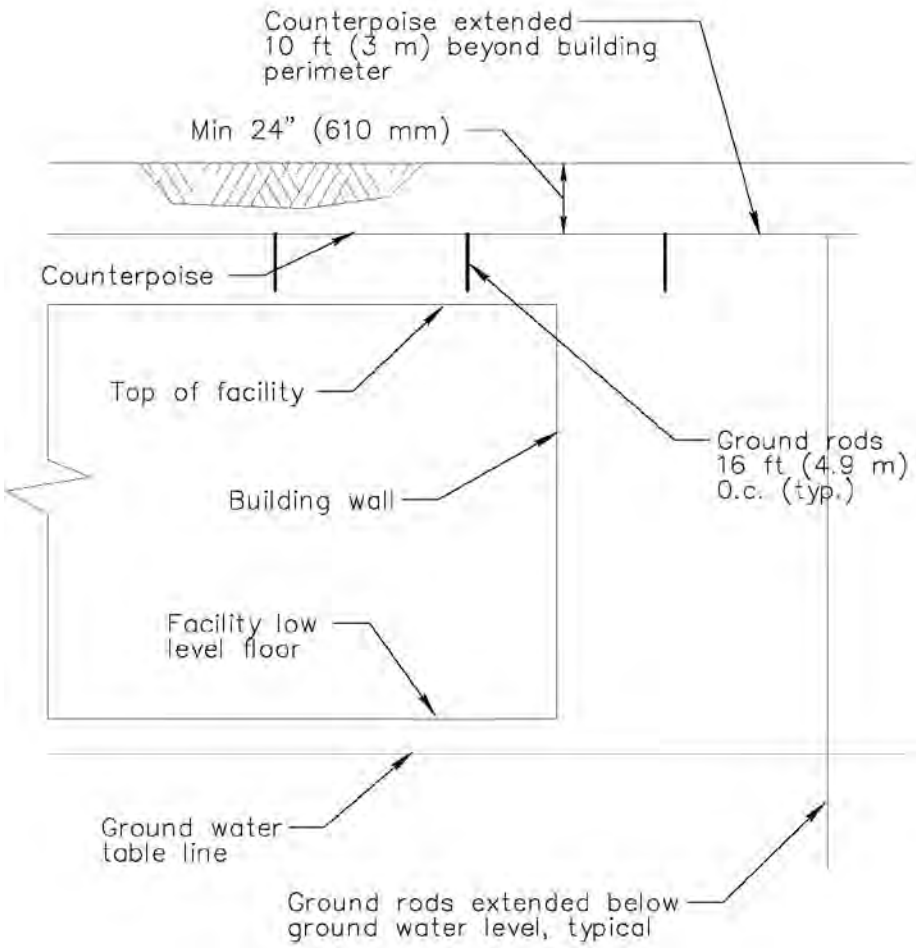

3-5.11 Electrically-Controlled Target Training System.

In the absence of any specific guidance or standards for targeting systems, apply the following. Run shielded control cables (from targets to controls) or enclose the cables in metal conduit. Provide surge protection on all signal and power lines in accordance with NFPA 780.

3-5.11.1 Control Tower.

Provide a complete protection system with at least two air terminals installed on the roof.

3-5.11.2 Target Control System.

Where each target mechanism box assembly station has a separate control relay, a lightning protection ground ring or grid is not required for protection of the down-range

target area. Where such control relays are not provided, a ground ring or grid must be provided below grade above wiring in trenches to all targets.

3-5.12 Petroleum Oil Lubricants (POL) Storage Tanks.

Where above-ground steel storage tanks are constructed on foundations of concrete or masonry, provide grounding in accordance with the grounding schedule shown in Table 3.1, regardless of tank height. Where underground steel tanks are constructed in direct contact around the entire perimeter with not less than 18 inches (458 mm) of earth cover, grounding is not required.

Table 3.1 Fuel Storage Tank Grounding Schedule.

Tank Circumference (Feet)	Tank Circumference (Meters)	Ground Connections Minimum Number
200 and less	61 and less	2
201 through 300	61.2 through 91.5	3
301 through 400	91.7 through 122	4
401 through 500	122.2 through 152	5
501 through 600	152.7 through 183	6
601 through 800	183.2 through 244	7
801 and more	244.2 and more	8

3-5.13 Satellite Dishes.

Locate a satellite dish within a zone of protection.

APPENDIX A REFERENCES

Note: *The most recent edition of referenced publications applies, unless otherwise specified.* [1]

MILITARY PUBLICATIONS

U.S. Air Force
AFMAN 91-201, *Explosives Safety Standards*.

U.S. Army
DA Pamphlet 385-64, *Ammunition and Explosives Safety Standards*.

Department of Defense
MIL-HDBK 274A (AS), *Military Handbook Electrical Grounding for Aircraft Safety*.
MIL-HDBK 419A, *Grounding, Bonding, and Shielding for Electronic Equipment and Facilities*.

Department of Defense: Unified Facilities Criteria
http://www.wbdg.org/ccb/browse_cat.php?o=29&c=4
UFC 3-260-01, *Airfield and Heliport Planning and Design.*
UFC 3-260-02, *Pavement Design for Airfields.*
UFC 3-460-01, *Petroleum Fuel Facilities.*
UFC 3-501-01, *Electrical Engineering.*
UFC 3-520-01, *Interior Electrical Systems*.
UFC 3-550-01, *Exterior Electrical Power Distribution*.
UFC 4-510-01, *Design: Medical Military Facilities*.

http://www.wbdg.org/ndbm/design_guidance.php
UFC 4-420-01, *Design: Ammunition and Explosives Storage Magazines*. (DRAFT)

U.S. Navy
NAVSEA OP-5, Volume 1, *Ammunition and Explosives Safety Ashore*.

NON-MILITARY PUBLICATIONS

IEEE (formerly Institute of Electrical and Electronics Engineers)
IEEE 142, *Recommended Practice for Grounding Industrial and Commercial Power Systems* (Green Book).

National Fire Protection Association
NFPA 33, *Standard for Spray Applications Using Flammable or Combustible Materials*.

---

[1] Addresses for standards:
1. IEEE, 445 Hoes Lane, Piscataway, NJ 08854-4141.
2. National Fire Protection Association, One Batterymarch Park, Quincy, MA 02169-7471.
3. Underwriter's Laboratories, Inc., 333 Pfingston Road, Northbrook, IL 60062.

NFPA 70, *National Electric Code*.
NFPA 70B, *Recommended Practice for Electrical Equipment Maintenance*.
NFPA 77, *Recommended Practice on Static Electricity*.
NFPA 99, *Health Care Facilities Code*.
NFPA 407, *Standard for Aircraft Fuel Servicing*.
NFPA 780, *Standard for the Installation of Lightning Protection Systems*.

Underwriter's Laboratories
UL 96, *Lightning Protection Components*.
UL 96A, *Installation Requirements for Lightning Protection Systems*.
UL 467, *Grounding and Bonding Equipment*.

APPENDIX B GLOSSARY

Acronyms and Abbreviations

AFCESA	Air Force Civil Engineer Support Agency
AFMAN	Air Force Manual
AFI	Air Force Instruction
AHJ	Authority Having Jurisdiction
AWG	American Wire Gauge
DoD	Department of Defense
EES	Earth Electrode System
EMI	Electromagnetic Interference
EMP	Electromagnetic Pulse
EPDM	Ethylene Propylene Diene Monomer (M-class) Rubber
ft	Feet (or Foot)
ft^2	Foot Squared or Square Feet
HQUSACE	Headquarters, US Army Corps of Engineers
IEEE	formerly Institute of Electrical and Electronics Engineers
in	Inch, inches
ILS	Instrument Landing System
LPS	Lightning Protection System
m	Meter
m^2	Meter Squared or Square Meter
mm	Millimeter
NAVFAC	Naval Facilities Engineering Command
NFPA	National Fire Protection Association
POL	Petroleum Oil Lubricants
USACE	US Army Corps of Engineers
UFC	Unified Facilities Criteria
UL	Underwriters Laboratories

Terms

Activity – The end user of a facility.

Approved – Acceptable to the Authority Having Jurisdiction.

Bonding – An electrical connection between an electrically conductive object and a component of a lightning protection system that is intended to significantly reduce potential differences created by lightning currents.

Catenary System – A lightning protection system consisting of one or more overhead wires. Each overhead wire forms a catenary between masts, and serves the function of both a strike termination device and a main conductor.

Conductor, Bonding – A conductor used for equalization potential between metal bodies and the lightning protection subsystem.

Contractor – Person(s) doing actual construction portion of a project.

Copper Clad Steel – Steel with a coating of copper bonded on it.

Designer of Record – The engineer responsible for the actual preparation of the construction documents.

Down Conductor, Lightning – The conductor connecting the roof conductors or overhead ground wire to the earth ground subsystem.

Labeled – Equipment or materials to which has been attached a label, symbol, or other identifying mark of an organization that is acceptable to the authority having jurisdiction and concerned with product evaluation, that maintains periodic inspection of production of labeled equipment or materials, and by whose labeling the manufacturer indicates compliance with appropriate standards or performance in a specified manner.

Listed – Equipment, materials, or services included in a list published by an organization that is acceptable to the authority having jurisdiction and concerned with evaluation of products or services, that maintains periodic inspection of production of listed equipment or materials or periodic evaluation of services, and whose listing states that either the equipment, material, or service meets appropriate designated standards or has been tested and found suitable for a specified purpose.