Modular Data Center

[STRATEGY AND APPLICATION]

The purpose of this Technote brief is to introduce the concept of the Modular Data Center, and to equip project teams with technical information to assess the feasibility of this solution for their particular projects.

BRIEF DESCRIPTION

Today's Data Center:

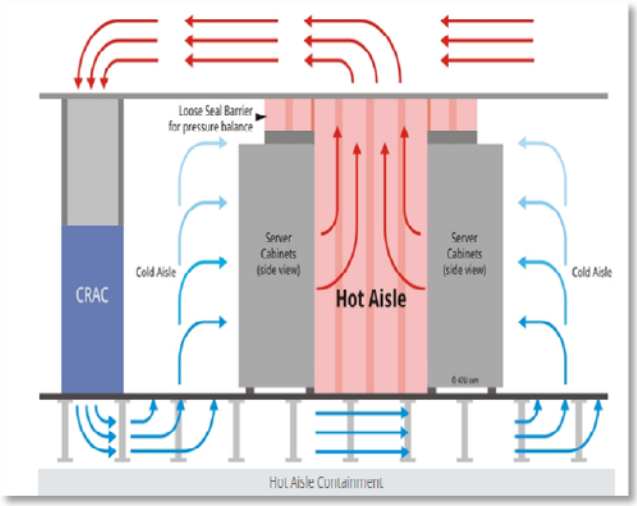

The familiar method for hosting IT services in a DoD computing facility incorporates some form of hot aisle/cold aisle separation of server racks sitting on a raised floor air distribution plenum within a permanent 'bricks and mortar' building envelope. Data rooms are cooled with dedicated Computer Room Air conditioners (aka CRAC units) located either along the perimeter of the space, or within the rows themselves to operate with greater thermal efficiency. These units distribute 70 deg air through perforated tiles directly in front of IT racks that pull this air in through integral fans and dissipate heat either through the back into hot aisles, or up into a ceiling plenum via a chimney. The goal is complete thermal segregation and point of source cooling, and we're now seeing approaches that incorporate complete row enclosure combined with in-row cooling; in effect sealing the cold aisle (providing access doors at the ends). These measures are driven not only by operating costs but also by federal mandates[1]. Data Centers require tremendous amounts of cooling, and a large Data Center may consume as much energy as a small town[2]

Compounding the energy usage is the problem of scalability. Data centers built for today's thermal load don't easily "scale-up" to handle tomorrow's rack density increases without substantial capital expenditure for additional mechanical support; a typical blade server can double the density in a traditional 42U form factor. In response, an emerging market of Vendors is pushing the concept of thermally optimized Data spaces into a scalable, modular, and potentially turn-key solution; these include Baselayer, iFortress, Schneider, Cisco, and others that claim savings in energy usage, capital/maintenance costs, and deployment time by modularizing the Data center. This technotes explores potential project applications and considerations in Army projects.

[1] I.e. through various Executive orders as well as National Data Center Consolidation Act, 2010, in which DoD in particular was identified as having the largest data center footprint of any government entity

[2] http://www.nrdc.org/energy/saving-energy-in-server-rooms.asp

These TechNotes are intended to provide general information for the consideration of design strategies. The TechNotes should NOT be interpreted as an endorsement of any specific product or technology.

The Modular Data Center:

A "Modular Data Center' refers to a solution that includes one or a combination of two types of form factors; ***containerized*** (ISO and non-ISO) or ***pre-engineered*** site-assembled. The functional "modules" of a ***containerized*** approach generally consist of an outer enclosure housing the IT servers, the cooling plant, or the power systems (i.e. UPS, generator, PDUs, etc). Alternatively, they may consolidate all of these functions in an "all-in-one" configuration[3]. The modules come in various standard and custom sizes but most commonly come as a weatherized high cube ISO container or other similarly sized transportable enclosure (typically 40(L) x 9.5(H) x 8(W) feet). The Units often may be ganged together or stacked (like "Lego-blocks"), placed outside on a concrete pad or mounted interior on skids within shell or warehouse space. They come pre-wired with conduit distributed within the insulated enclosure panels, and mechanical air devices and ducts within the plenum, and some vendors can accommodate DC power systems. Typically containerized solutions do not accommodate administrative "people spaces". Containerized systems will typically be subject to fiscal regulations of relocatable personal property.[4]

A ***pre-engineered*** site assembled data center differs from the containerized solution by its standardized "kit-of-parts" approach - stick-framing, insulated wall and roof panel components that lends itself to greater flexibility since it is not subject to set dimensions except as dictated by the standard panel size. These systems are usually shipped for on-site assembly on a prepared slab, and can include "people spaces" (offices conference rooms, bathrooms, etc) for a complete facility. These systems incorporate utility distribution via a standardized system of wall panel clips and fittings, and can also accommodate DC power systems. When feasible, some portions of the pre-engineered data center facility may come pre-assembled. Pre-engineered data centers will likely be classified as real property.[4] Whatever the form - containerized or pre-engineered – the modular data center must be engineered and warranted to perform as a complete system in its specific environment– inclusive of accessibility, OSHA, and exterior envelope requirements (doors, stairs, framing, roof membranes). Design considerations of each type of data center are discussed below.

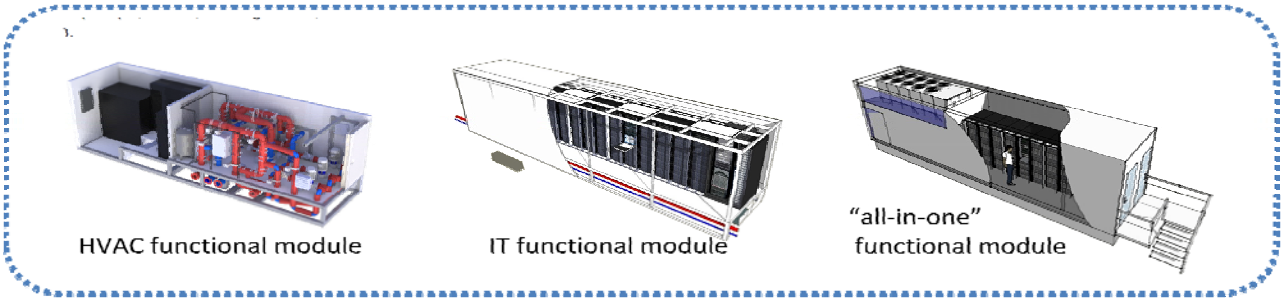

[3] Refer also to definitions found in UL Subject 2755 "Outline of Investigation for Modular Data Center", 31 Oct 2011.

[4] Refer to AR 420-1. The classification of the property depends on the mission, TOE authorization, site condition (e.g. use of existing facilities), and system analysis including supporting facilities. Real property assembly typically follows construction rules, whereas equipment assembly can be supported as with assembly of relocatable buildings. The site prep and associated infrastructure are typically real property regardless of module classification. Work classification determination has to take into account "intent" of the undertaking based on dependency of components of the items under acquisition.

These TechNotes are intended to provide general information for the consideration of design strategies. The TechNotes should NOT be interpreted as an endorsement of any specific product or technology.

THE CONTAINERIZED MODULAR DATA CENTER:

Components:

IT Server Module:

- A typical IT functional module normally holds between 16 and 19 IT racks in a single row running either down the center (with cold aisle and hot aisle on either side) or else along one side (providing a wider "Cold" aisle) on a subfloor plenum
- Includes gaseous fire suppression systems
- Limitations at this time are about 510 kW in a single container.

Figure 1-non-ISO server module with floor plenum and rack aligned CRAC units (wall panels removed)

Mechanical Module

- Same range of cooling options are available in the HVAC module as in traditional Data Centers
- A chiller plant module may include pumps, drives, storage tanks, etc. or may include the DX air cooled condenser, heat exchangers, fans, etc.
- Mechanical modules might be containerized for access control, skill-sets, or other operational reasons.

Power Module

- Typically houses the switchgear and switchboards, ATS, UPS with batteries, transformers, and panelboards.
- Some (but not all) can accommodate DC power systems.
- Standby generators can be a separate module, or else non-modularized.

"All-in-one" Module

- All, or almost all functional elements within a single enclosure.
- Applications are more limited to smaller Data Centers. A practical limit to one of these configurations is 150kW.
- Although named "all-in-one", there are often additional supporting elements required outside the module such as a generator or chiller.

Containerized Solution Applications:

- Ideal for emergency situations since it offers accelerated timelines in comparison with traditional Data Centers. From order to delivery can be 90 days or some cases even less. Utilitarian aesthetic.
- An ISO shipping container will usually carry a 3-year warranty, with a typical lifespan of 10 years, and modified ISO containers may void the warranty which may limit exterior application. Additionally, for permanent exterior construction, a purpose built non-ISO enclosure will be preferable over the ISO shipping containers.

These TechNotes are intended to provide general information for the consideration of design strategies. The TechNotes should NOT be interpreted as an endorsement of any specific product or technology.

- Stacking ISO containers generally requires more stringent testing.[5]
- Available in tier I through IV[6]
- Tested in the factory before deployment with all software and hardware installed for a turnkey solution. ISO containers can be shipped overseas, whereas non-ISO containers may or may not.
- Some Vendors can offer SCIF accredit-able modules.
- Can be rated for all exterior conditions as well as interior conditions; Engineered to meet ASCE 7 load requirements for buildings (exterior) and interior fire codes as well. However, some system of stairs/ramps will be needed for units with subfloor.
- Since modules hold fewer than 11 occupants, does not require compliance with UFC 4-010-01 Anti-Terrorism/Force Protection Requirements. However, designer is advised to confirm with OCONUS projects AHJs. Can meet AT/FP requirements when applicable.
- Scalable and can be integrated with existing construction: modules can be added or removed without significant renovation cost. "plug-and-play" versatility but generally not re-configurable.
- Acquisition may be real property or equipment depending on unit authorizations. Prepared site (pad, utilities, etc) are always real property.

Figure 2 – pre-engineered Modular Data Center may be shipped assembled modules or "kit-of-parts" components

THE PRE-ENGINEERED MODULAR DATA CENTER:

Components:.

- Similar to other pre-engineered building types: Kit-of parts system of interlocking and pre-finished insulated 2 foot wide, 4 inch wall and roof/ceiling panels. Panels may be sloped and conventionally

[5] Per UL Subject 2755, ISO shipping containers are stack tested with their doors in the *closed* position. In this position, doors play an integral part in the load path; this testing is therefore insufficient for a "permanent" installation that must withstand environmental forces whatever the door position.

[6] Tier definitions: I: non-redundant capacity, II: redundant capacity components with single non-redundant distribution, III: redundant components and distribution, IV: Multiple independent isolated systems and distribution. See Uptime Institute Standards for more detail.

These TechNotes are intended to provide general information for the consideration of design strategies. The TechNotes should NOT be interpreted as an endorsement of any specific product or technology.

roofed with roof membrane.

- Steel post and joist system are part of the system and designed by the Vendor's structural engineers for multiple ganged/stacked configurations.
- Interior partitions are also panelized and Sound rated to accommodate any space within the Data Center; from conference rooms to offices and entrances.
- May incorporate any type of cooling plant needed.
- Includes gaseous fire suppression systems.

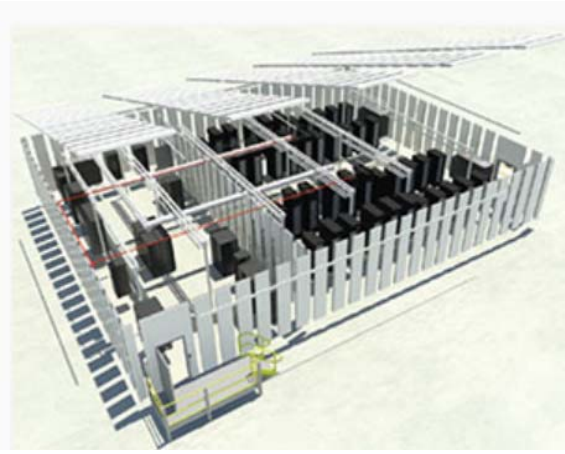

Figure 3 - pre-engineered site assembled data center.

Pre-Engineered Solution Applications:

- Performance similar to conventional building with typically lifetime warranty. includes all constructed elements of the facility. Rated for all exterior and interior conditions; Engineered to meet ASCE 7 load requirements for buildings (exterior) and interior fire codes as well. However, some system of stairs/ramps will be needed for units with subfloor
- Better suited for larger Data Centers in which the needs may vary over the facility lifecycle.
- Available in tier I through IV[7]
- Can be completely separable from existing construction, or integrated within it. Allows for communicating openings within and on the perimeter (e.g. doors and windows)
- Can provide a complete and usable facility.
- Not limited by container sizes, so rack layout is less space constrained than a container which offers better rack layout flexibility.
- Available as SCIF accredit-able.
- Scalable; panels may be reconfigured. Complete plan configuration flexibility can be square, L-shaped, rectangular footprint etc ; ability to construct any or all functional units of a Data Center. Can be enlarged, reduced more easily than traditional building construction.
- Can include admin spaces, non-proprietary windows and doors.
- Depending on size and occupant density, may be required to comply with all elements of the UFC 4-010-01 Anti-Terrorism/Force Protection Requirements similar to any other MILCON building.
- Units often have integral exterior mounted panel clips to mount exterior veneer systems.
- If considered real property vice equipment, may not be suitable for time-sensitive deployment.

[7] Tier definitions: I: non-redundant capacity, II: redundant capacity components with single non-redundant distribution, III: redundant components and distribution, IV: Multiple independent isolated systems and distribution. See Uptime Institute Standards for more detail.

These TechNotes are intended to provide general information for the consideration of design strategies. The TechNotes should NOT be interpreted as an endorsement of any specific product or technology.

Energy Savings

Cooling Energy

- Cooling for containerized modular Data Centers are more thermally efficient on a rack basis than traditional Data Centers because pressurized (non-laminar) supply air goes to equipment only, rather than the surrounding white space of a traditional data center. Vendors claim cooling savings of 10 to 20% for their rack-aligned subplenum mounted CRAC units.

Power Usage Effectiveness (PUE)

- PUE is the industry standard measurement for Data Center efficiency, and is derived by dividing total incoming power by the IT equipment load. The total incoming power includes, in addition to the IT load, the data center's electrical and mechanical support plant. Smaller PUE is more efficient, since it means that more incoming power is consumed by IT equipment instead of supporting plant equipment to cool it.

- Industry average PUE in bricks and mortar data centers is about 2.5, though 1.5 is becoming a feasible target. Vendors of Modular Data Centers claim PUEs as low as 1.15 can be attained in their products.

Heating Energy

- Heating energy is rarely a consideration for Data Centers, except for extreme climates. Industry and Army projects both typically recycle the rejected condensing water from a heat recovery chiller to provide "free heat" to the remainder of the building for occupant comfort.

LEED Credits (NC 2009)

LEED

Modular Data Centers meet the NC 2009. Additionally, they will also meet the LEED v4 (2012) no yet adopted by Army. That latest version addresses Data Centers but not specifically modular centers.

These TechNotes are intended to provide general information for the consideration of design strategies. The TechNotes should NOT be interpreted as an endorsement of any specific product or technology.

Cost Comparisons

Figure 4 – HP ISO-containerized data center

Figure 5 – Baselayer non-ISO containerized data center

Figure 6 – iFortress pre-engineered data center

Description

Installed Primary facility installation cost comparison between Vendor offerings is based upon units that house equipment for Data processing; includes floor plenum, special temperature, humidity, and environmental controls, raised access flooring, fire protection and security measures. Beyond capital cost, vendors of Containerized Data Centers claim a total cost of ownership savings of 25% over bricks and mortar data centers, with operating savings of 30%. However, these savings usually presume an expansive and dynamic growth model with large capacity data centers that may not reflect the current Army model; Army is consolidating all Data Centers into either Core Data Centers, Installation Information Nodes, or special purpose/tactical component nodes.[8] In contrast to private sector, Army is shrinking Data Center footprint, not growing it. And the typical Installation Information Systems Facility will

[8] Refer to end state 2017/2018 JIE Computing Infrastructure; Core Data Center Reference Architecture v1.0.

These TechNotes are intended to provide general information for the consideration of design strategies. The TechNotes should NOT be interpreted as an endorsement of any specific product or technology.

have a server load of only about 500 to 700 kW on average. The cost dynamics at that scale therefore work differently so cost savings should be evaluated carefully for the particular application.

Due to the range of common rack densities available –from 1kw to 30 kw for traditional rack mounted servers - Cost comparisons on a square footage basis for the Data Center space are subject to some distortions due to differing rack density. For example, IBM claims to be able to pack 17 racks within their 40 foot ISO container measuring about 320 SF providing 510 total KW in 798 U1 form factor servers. By contrast, they can provide double that capacity within the same footprint by installing 1,596 blade servers instead, without a proportionate increase in the mechanical footprint. Nevertheless, in the comparisons below we have assumes a common rack density and compare square footage costs.

Note that the Pre-Engineered Data Center cost is not directly comparable to the containerized solutions since those pre-engineered solutions usually include non-IT spaces.

Capital Cost

Construction		Cost	Unit
1)	ISO-containerized Data Center	$3,000.00	per SF
2)	Non-ISO containerized Data Center	$4,500.00	per SF
3)	*Pre-Engineered Data Center*	*$420.00*[9]	*per SF*

[9] Cost based on iFortress proposal for CACI project Pyeongtaek, South Korea with 1.06 area cost adjustment. Cost reflects a facility that includes not only the data center portion but also the people spaces. This skews the square foot costs downward compared with the containerized solutions.

These TechNotes are intended to provide general information for the consideration of design strategies. The TechNotes should NOT be interpreted as an endorsement of any specific product or technology.

Product Basis of Comparison

ISO-Containerized Data Center

- One HP ISO-certified standard high-bay turn-key containerized data center module with 16 to 19 racks included, all systems pre-fabricated and module with in-row CRAH units, and placed on prepared concrete slab with power and cooling already available . Includes systems management controls/software. Container shipped by freight and erected at CONUS location. Personnel spaces not included; not a fully functional facility on its own.

Non-ISO containerized Data Center

- One Baselayer module with 20 racks. Includes all systems pre-fabricated and module placed on prepared concrete slab with power and cooling already available. Includes systems management controls/software. Data Center was factory panelized and factory assembled with integral in-row CRAH units. Assembled modules shipped by freight (double wide) and erected at CONUS location. Personnel spaces not included; not a fully functional facility on its own.

iFortress Pre-Engineered Data Center

- 5,120 SF Modular Data Center was factory panelized and field erected and includes integral in-row CRAH units. Includes full structural, independent mechanical systems, bathrooms, including personnel spaces similar to traditional bricks and mortar data center. Fully functional facility. Membrane roof. No exterior veneer materials added.

These TechNotes are intended to provide general information for the consideration of design strategies. The TechNotes should NOT be interpreted as an endorsement of any specific product or technology.

Vendors

Baselayer:
https://www.baselayer.com/

iFortress:
http://ifortress.com/

Cisco:
http://newsroom.cisco.com/press-release-content;jsessionid=F151F99E420011C28F2FE1F6014AD96C?type=webcontent&articleId=763012

Code Restrictions

Generally will meet all applicable Codes**.** Accessibility may require stairs/ramps.

Warranty Info

Generally 'conditional lifetime**.'**

OSHA

Designer needs to ensure that if AHJ classifies the container spaces as "habitable space" that applicable building and OSHA requirements can be met with the system. Containers typically meet OSHA when containers are considered utility spaces and not "habitable space" as the code defines it.

Sample Spec. (Pre-Engineered)

1. The finished structure will be fully rated, self-contained, airtight, water and hermetically sealed energy efficient, re-usable, "Green" facility/assembly that when tested as an assembly complies with:

a. Structural - IBC Exterior Building Code Standards/DoD Survivability & Lethality Standards
   i. Roof Load – minimum 40 Lb/Ft²
   ii. Wind Load – minimum 2 hours 75 mph sustained force
   iii. Bending Stresses – minimum 13,000 lbs psi
   iv. Seismic – Site Class D
   v. Blast Load – Minimum 8 psi – Maximum 11.5 102 ms overpressure
   vi. Sound Transfer Classification – minimum STC 30
b. Fire/Thermal
   i. Walls, Ceiling, Doors, Penetrations – Fully Rated Assembly against ASTM E119 - minimum 90 minutes
   ii. Door NFPA 252 90 minute rating
   iii. R value – Assembly – minimum r 22
c. Hydro-dynamics/Permeability

These TechNotes are intended to provide general information for the consideration of design strategies. The TechNotes should NOT be interpreted as an endorsement of any specific product or technology.

i. Airtight – NFPA 2001: Time (Size Dependent)
a) Annually recertified
ii. Encapsulation – ASTM E 1795-97 *
iii. Mildew Resistant – ASTM D3273/3274 *
iv. Permeability – ASTM D 1653 *
v. Weathering – ASTM G53/B 117 – Federal TT-C-555B *
vi. Humidity – ASTM D 4585 *
vii. ASTM E119 – Hose Stream Test

d. Environmental
i. "Green" – manufactured with recycled and recyclable materials, can be dissembled and relocated, re-used
ii. Insulated – energy efficient
iii. LEED component contributor – innovation point, Green, reduce operating cost, non-invasive field assembly (i.e. dust free assembly)

e. Blast
i. Blast load min 8psi/max 11.5 psi
ii. Tolerances/Criteria: No visible structural damage and all components will maintain 100% functionality after the explosion and to the blast overpressure.

f. Interior Surfaces (Walls/Ceiling)
i. High reflectance white – minimum 85% reflectance quality
a) Reduction in light emanating sources/equipment/power consumption

g. Warranty
i. Conditional Lifetime
a) Subject to annual recertified by Factory Authorized Agent

These TechNotes are intended to provide general information for the consideration of design strategies. The TechNotes should NOT be interpreted as an endorsement of any specific product or technology.

Project Government Information Processing Center with expansion capabilities

Challenge: Build a Data Center within a Data Center without turning it into a construction zone:

Solution: "Design and Assemble 1,000 SF an on-site spatially elastic MCF Series iFortress™ within a fully operational, larger mission critical facility. When building a conventional Data Center, the amount of dust, contractors, noise, and general disruption is generally unacceptable, as risk involved in disruption is too high. With iFortress, there was no need to quarantine the area of deployment with plastic curtains because there is zero dust or disruption created during assembly."

"The Government required 1,000 ft² today but with expansion capability in future. Prior to iFortress, the Government decided on 2 options. Either renovate the Data Center that would allow insertion of a shipping container, or over-build a 2,000 ft² facility, costing them double in operating costs. iFortress engineered, delivered, and installed a 1,000 ft² MCF Series iFortress™ in 8 days, created no disruption or airborne challenges and nearly cut the budget in half."

"Due to the complexities associated with deploying such a facility, the Government planned for 14 to 15 months in anticipation of delays despite conventional construction estimates of 9.5 months. iFortress had the US Government's facility ready and operational in less than 4 months."

"The solution achieves a PUE of 1.4. "

.

These TechNotes are intended to provide general information for the consideration of design strategies. The TechNotes should NOT be interpreted as an endorsement of any specific product or technology.